LOTO-eng
Scientific Instruments

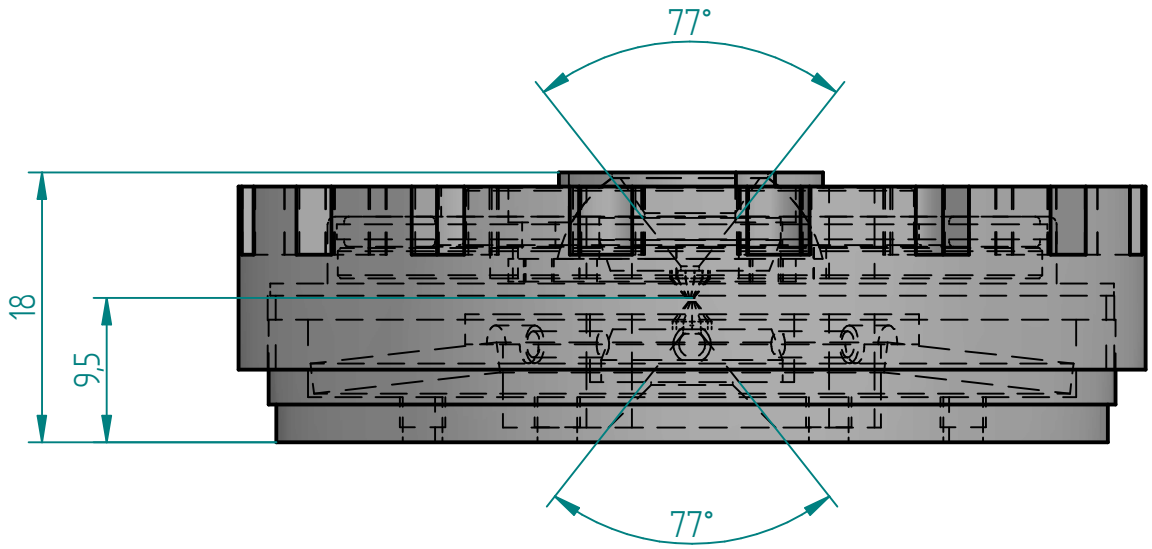

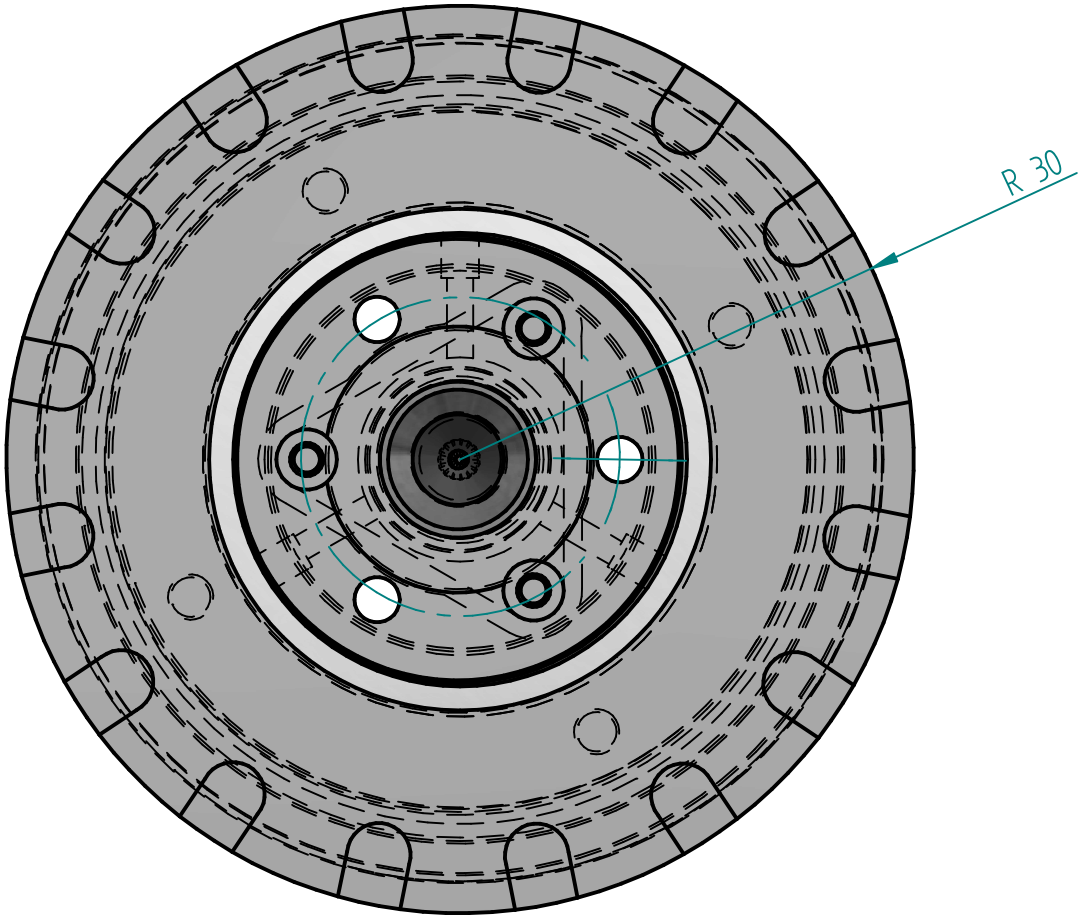

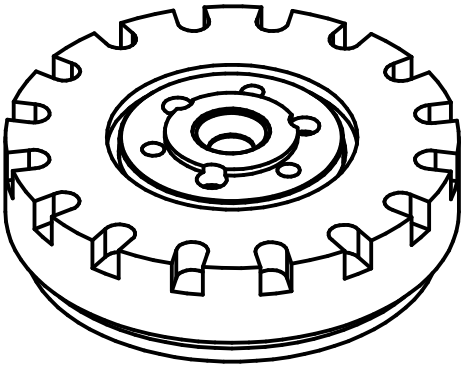

Product type:BRI-160