LOTO-eng
Scientific Instruments

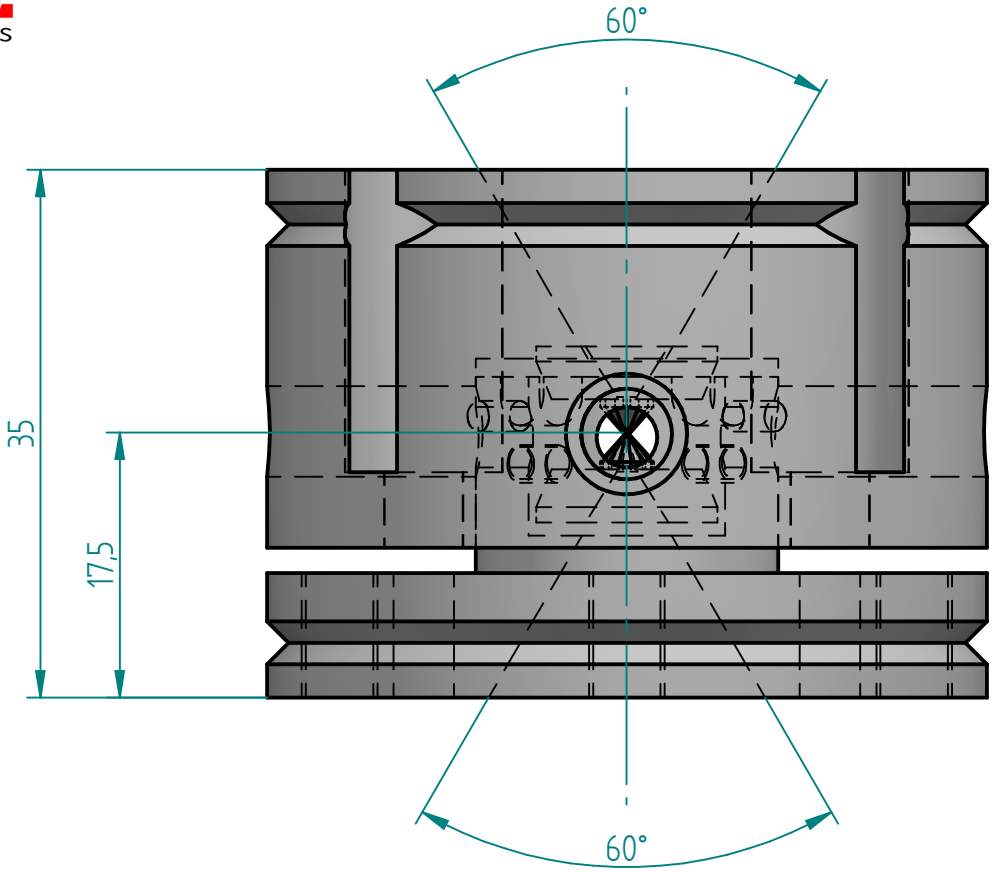

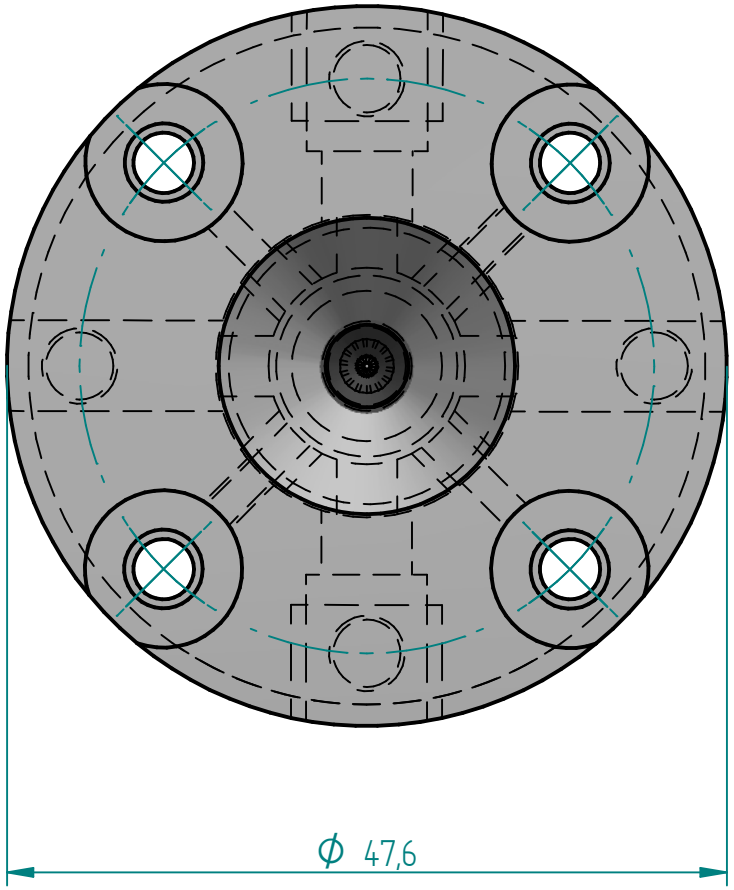

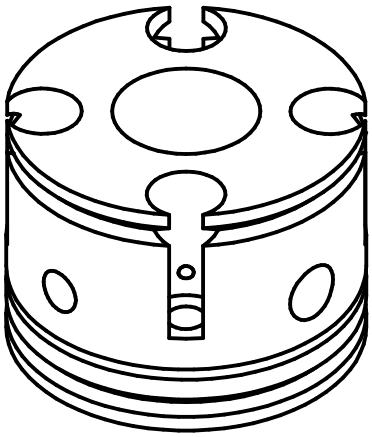

Product type:SYM-060